OSSM Extrusion Mount - Getting Started

unbox

discord

- You've received and unboxed your OSSM Extrusion Mount kit – congratulations! Take a moment to **get excited and curious, the journey begins!** Check out our videos on ossm.tech as well as our great community discord if you need support with your build!

- Enjoy the process of creating your own sexual exploration tools.
  - Keep it OSSM 😉

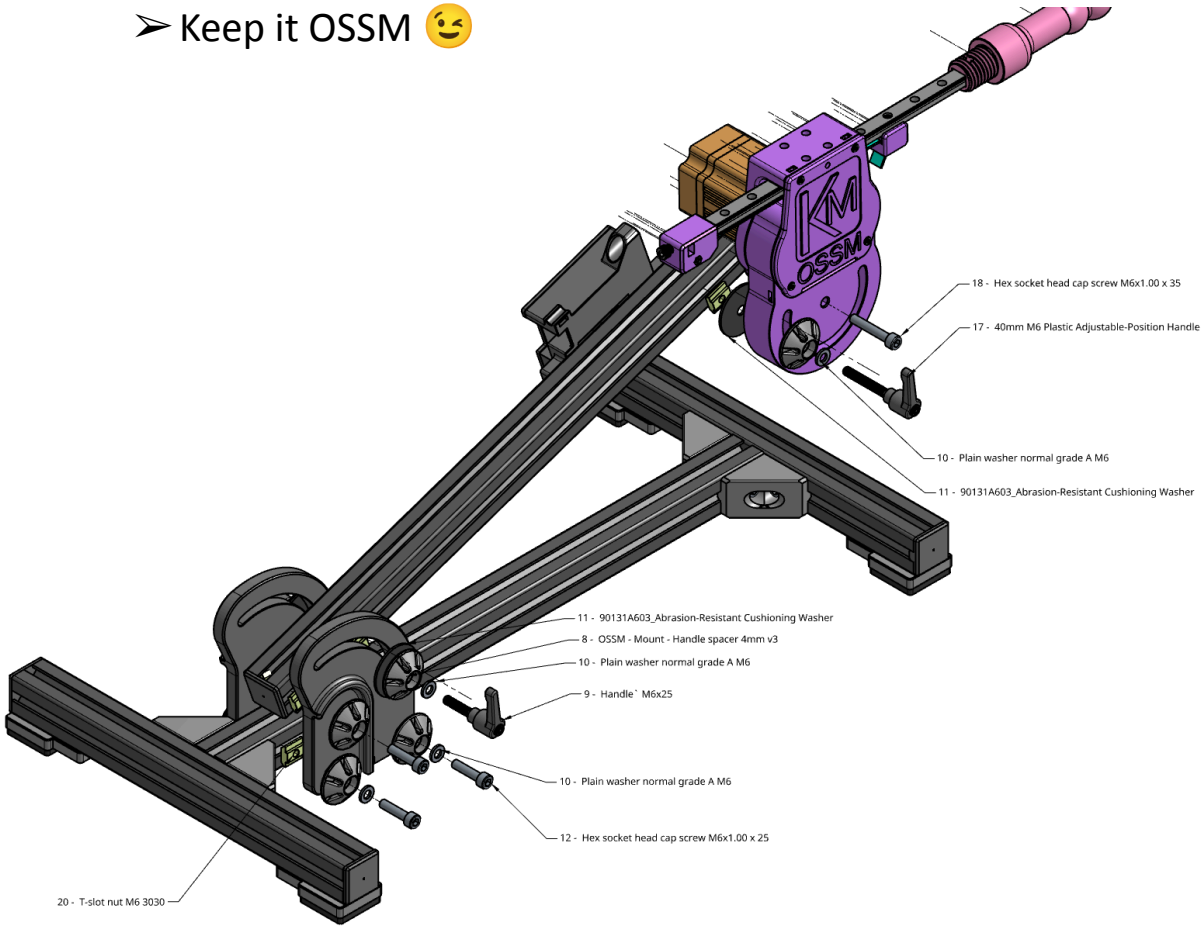

OSSM Extrusion Mount - Getting Started

QTY	Part
1	OSSM Pivot Plate 2
1	OSSM Pivot Plate 1
1	OSSM Pivot Body
1	OSSM PCB Box
1	OSSM PCB box lid
9	OSSM Handle Spacer
4	OSSM Foot
3	OSSM T Nut Support
2	12" Extrusion
1	18" Extrusion
1	19.5" Extrusion
4	Base Brackets
1	Sandbag
Bag 1	
14	M6x12 Screw
6	M6x25 Screw
1	M6x35 Screw
16	M6 Washer
1	M6 Fender Washer
24	M6 T-Nuts
2	M6x25mm Handle
1	M6x40mm Handle
Bag 2	
4	M5x35 Screw
4	M5 Nut
Bag 3	
4	Rubber Washer
4	Grippy Feet
6	End caps

OSSM Extrusion Mount - Getting Started

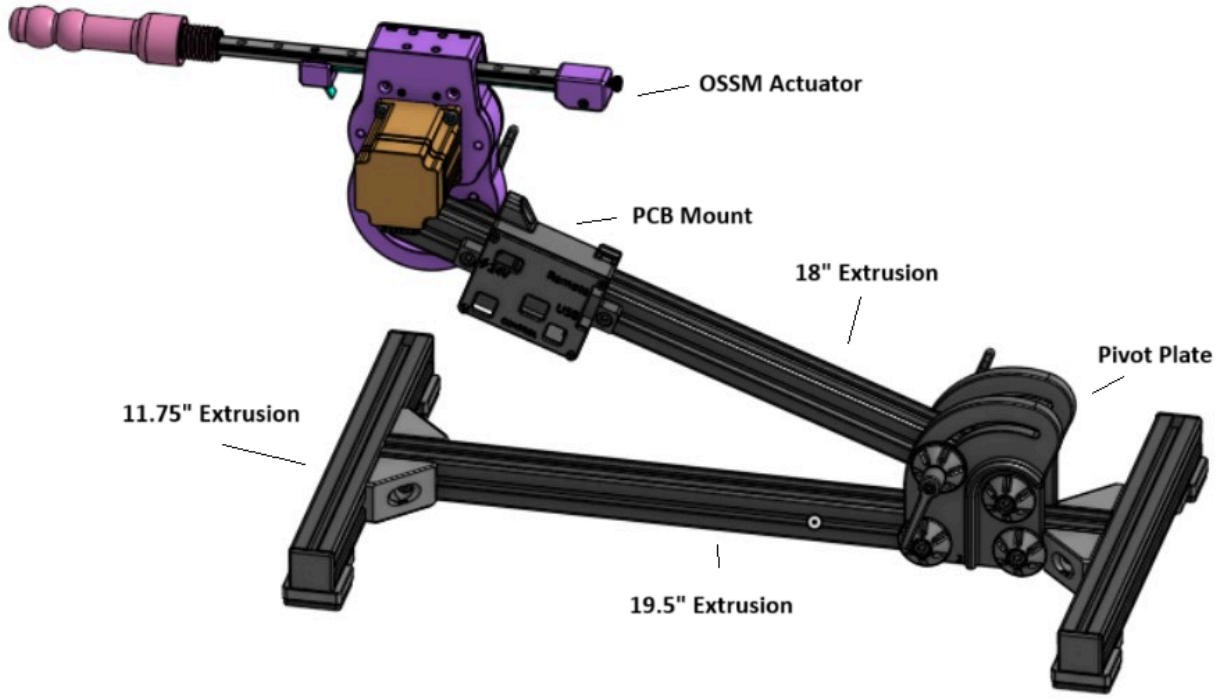

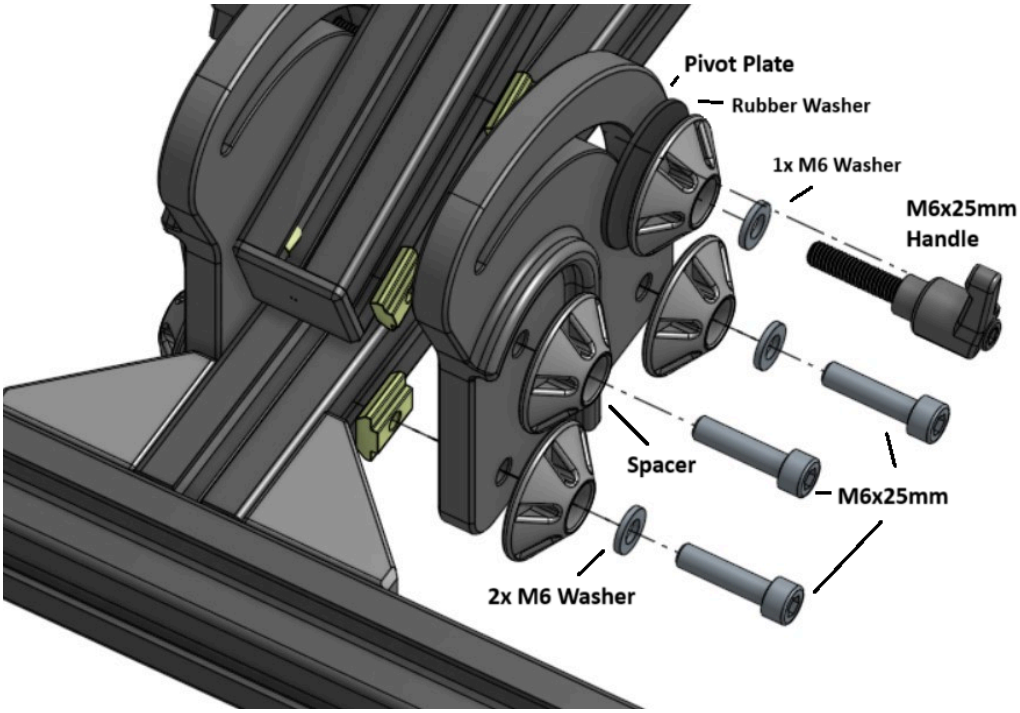
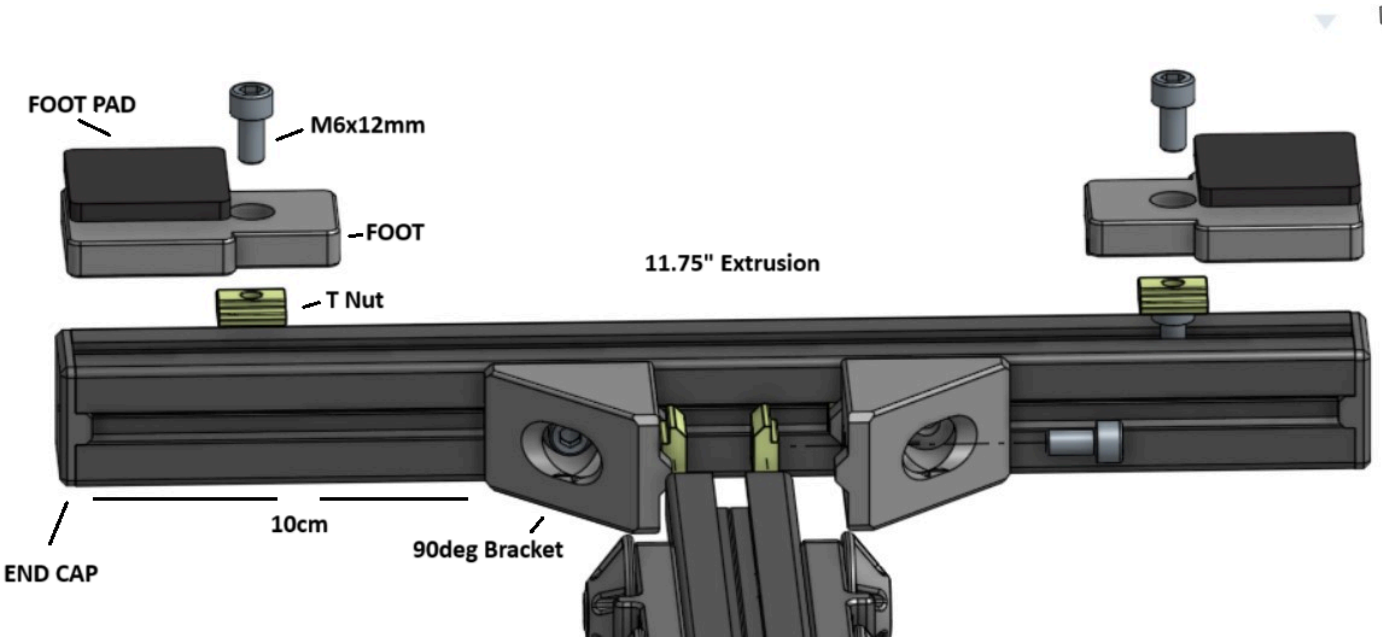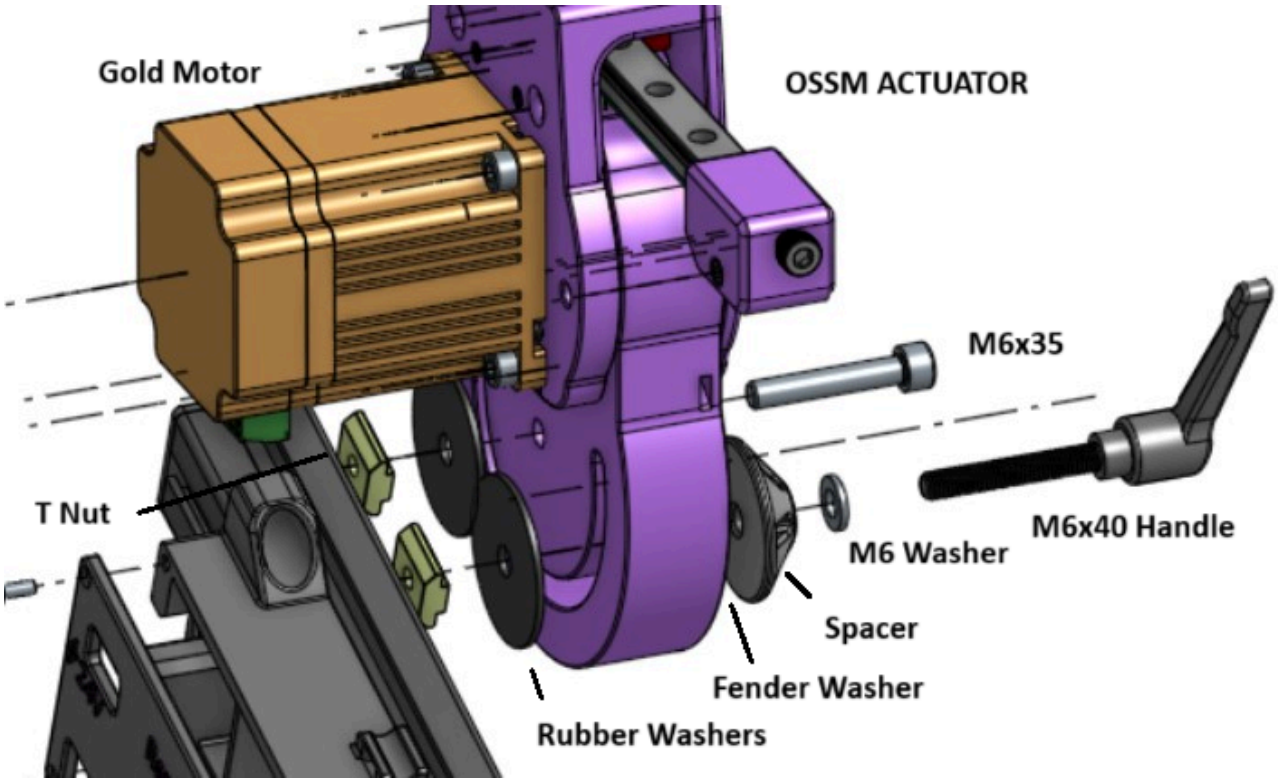
OSSM Extrusion Mount - Getting Started